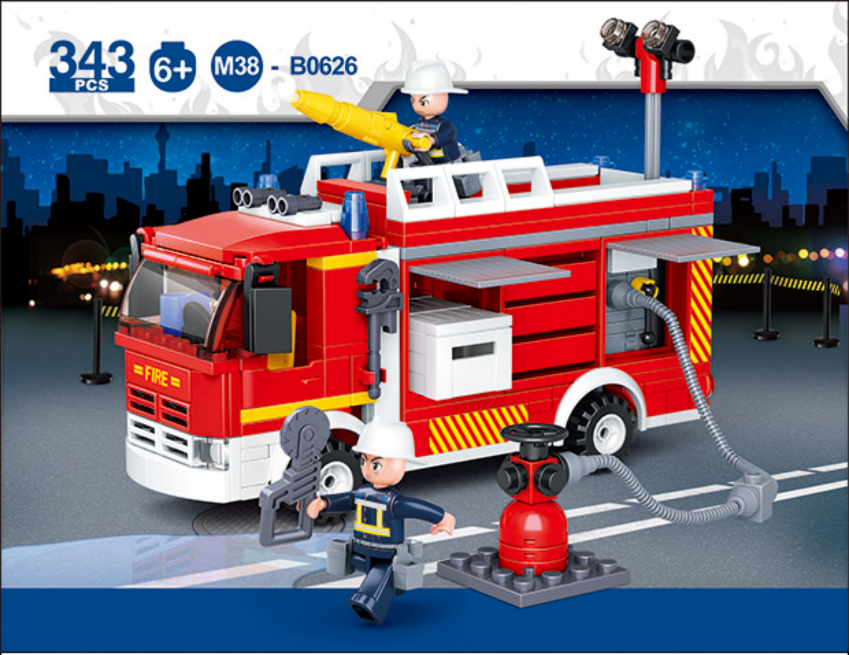
343
PCS
6+
M38 - B0626
FIRE

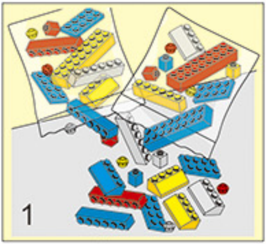

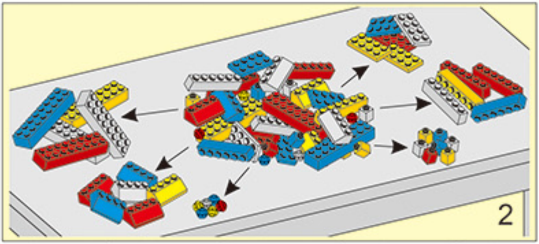

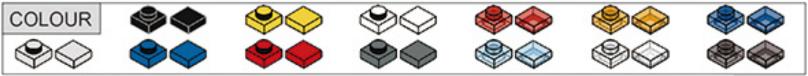

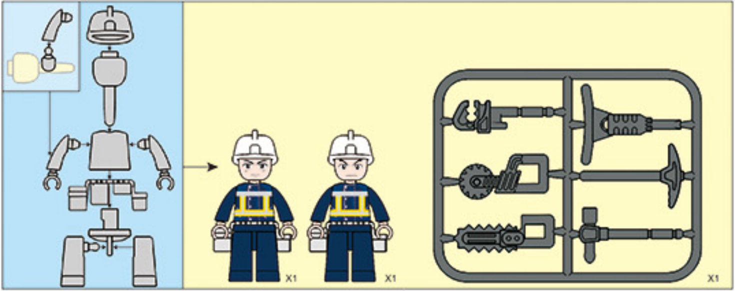

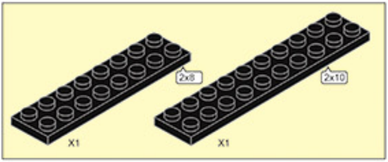
2x8
2x10
X1
X1

1

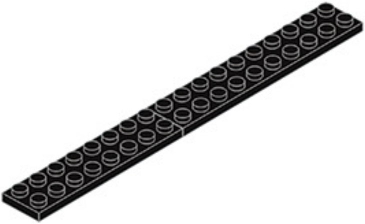

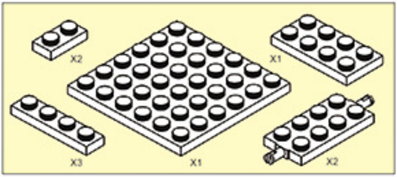
X2
X1
X3
X1
X2

2

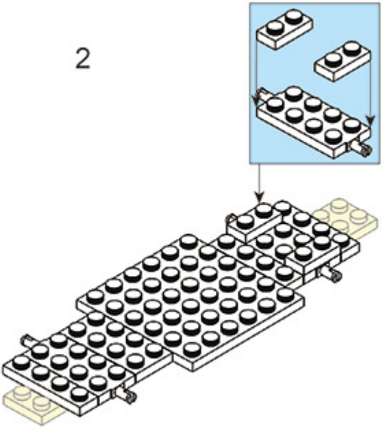

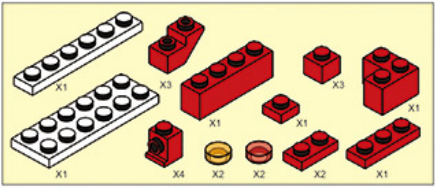
X1
X3
X1
X1
X3
X1
X1
X4
X2
X2
X2
X1

3

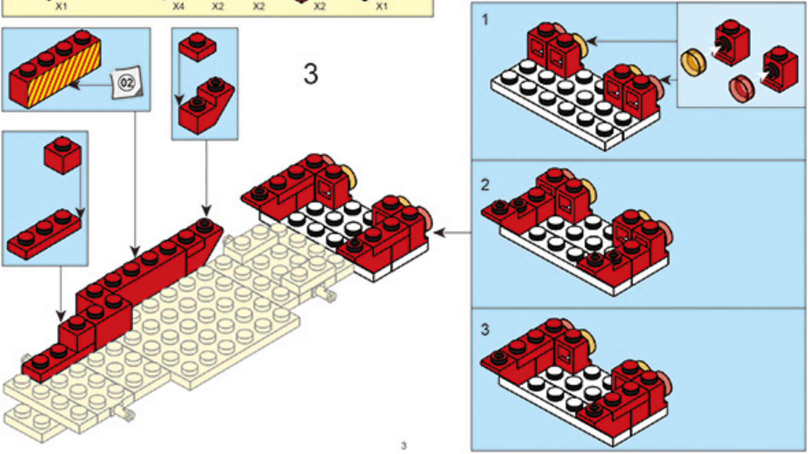

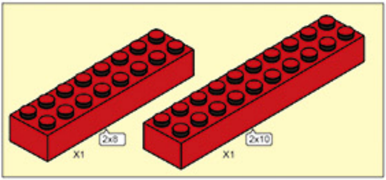
2x8
X1
2x10
X1

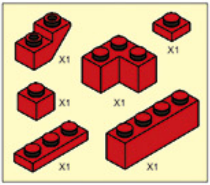
X1
X1
X1
X1
X1
X1

4

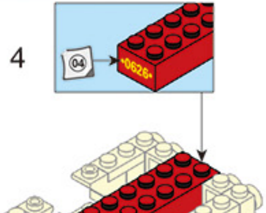

5

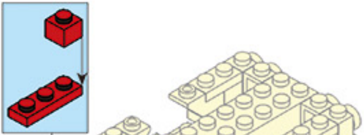

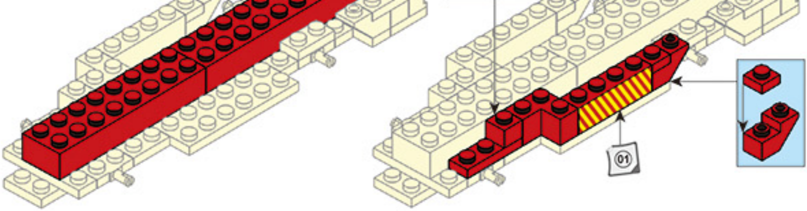

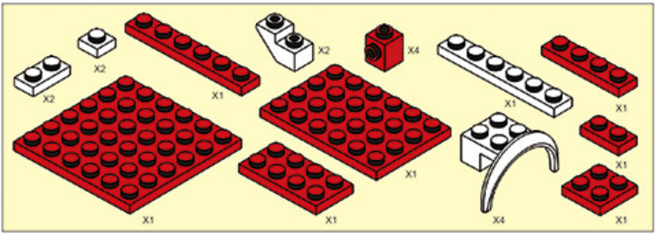
X2
X2
X1
X2
X4
X1
X1
X1
X1
X1
X1
X4
X1

6

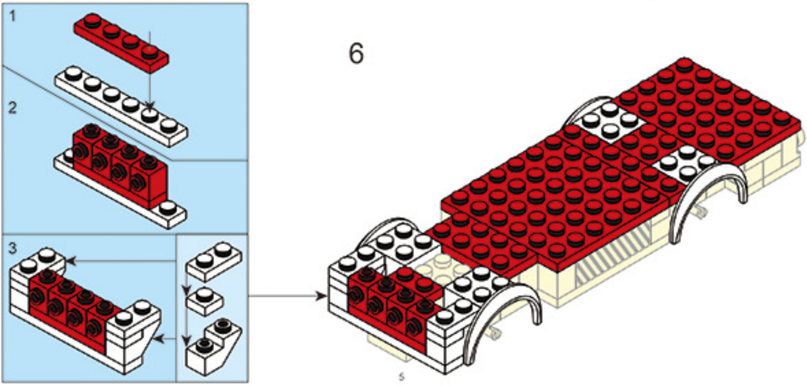

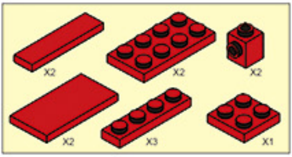
X2
X2
X2
X2
X3
X1

7

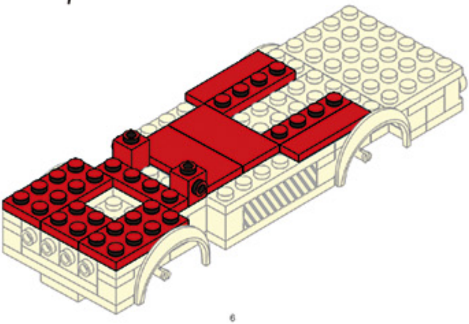

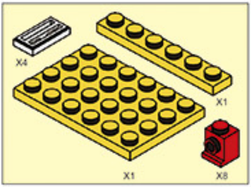

8

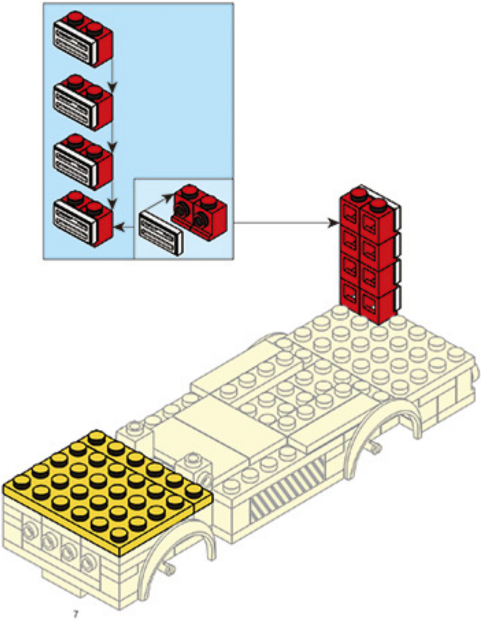

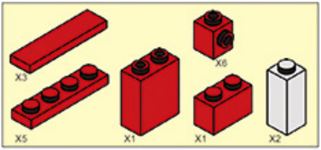
X3
X5
X1
X1
X8
X2

9

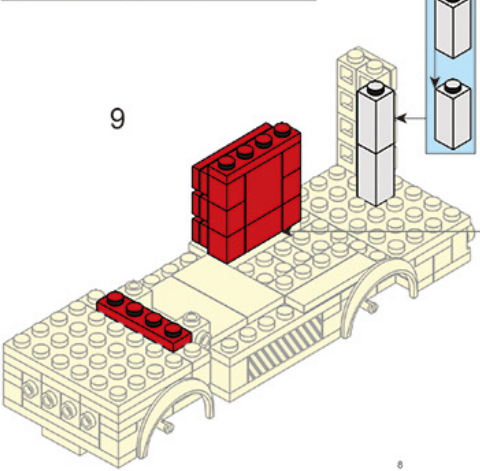

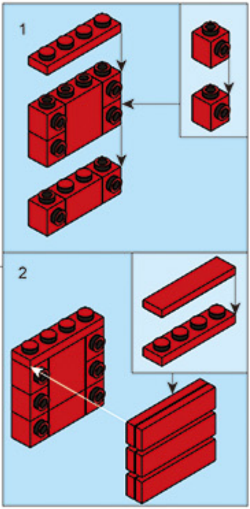

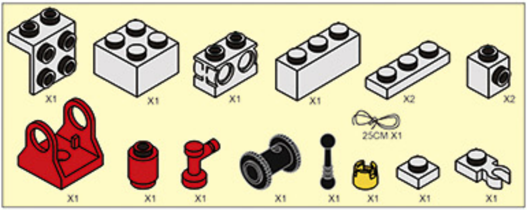
X1
X1
X1
X1
X2
X2
25CM X1
X1
X1
X1
X1
X1
X1
X1

1

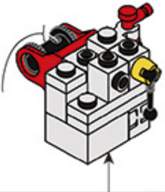

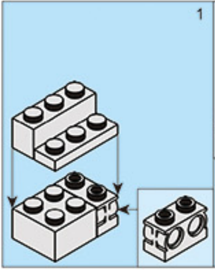

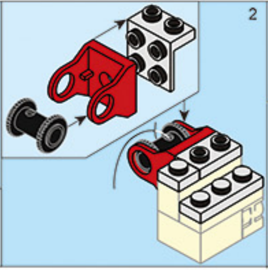

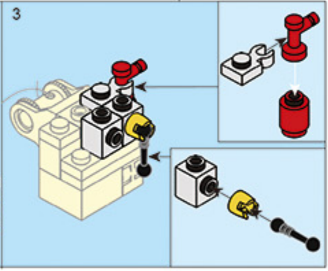

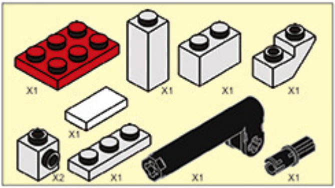
X1
X1
X1
X1
X1
X2
X1
X1
X1

2

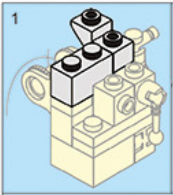

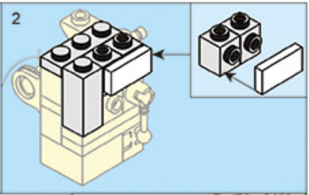

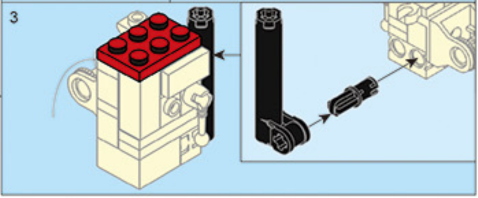

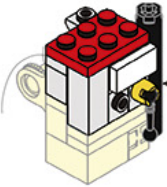

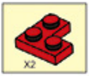

3

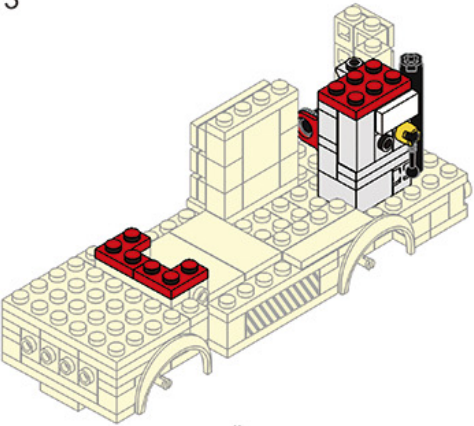

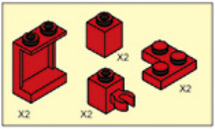

4

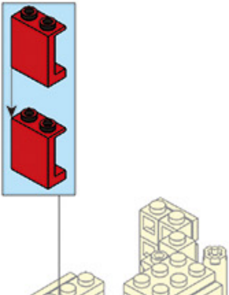

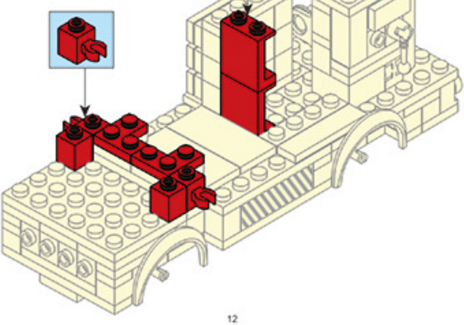

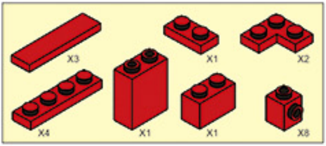
X3
X1
X2
X4
X1
X1
X8

5

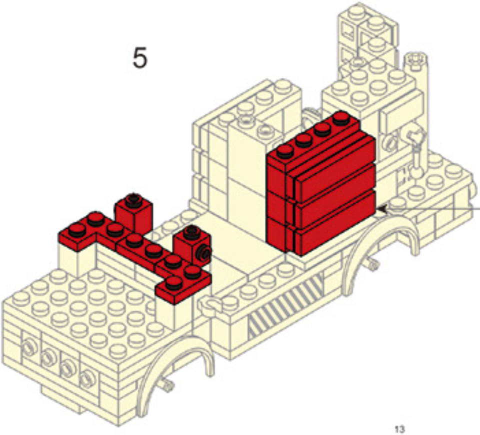

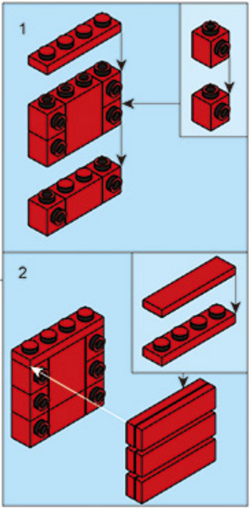

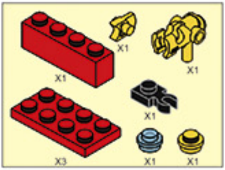
X1
X1
X1
X1
X3
X1
X1

6

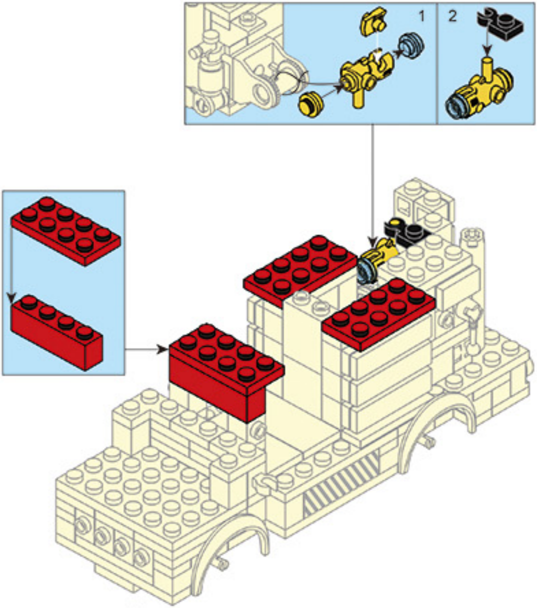

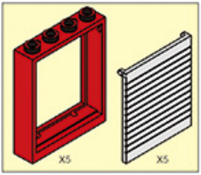

7

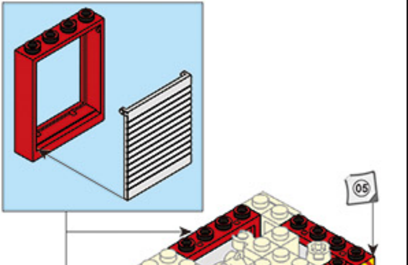

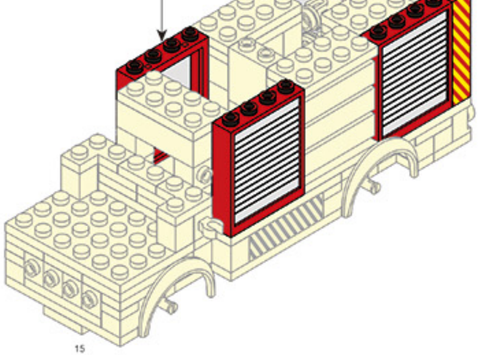

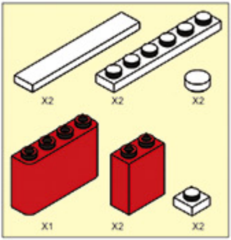
X2
X2
X2
X1
X2
X2

8

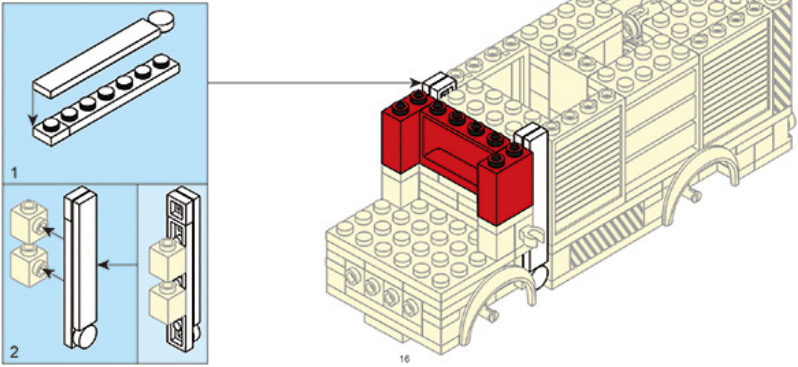

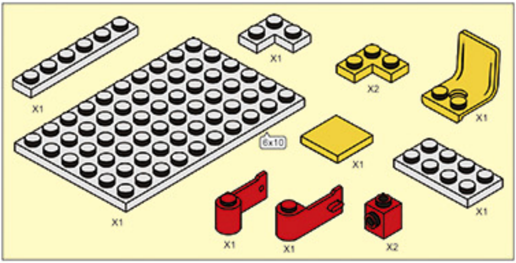
X1
X1
X2
X1
6x10
X1
X1
X1
X1
X1
X2

9

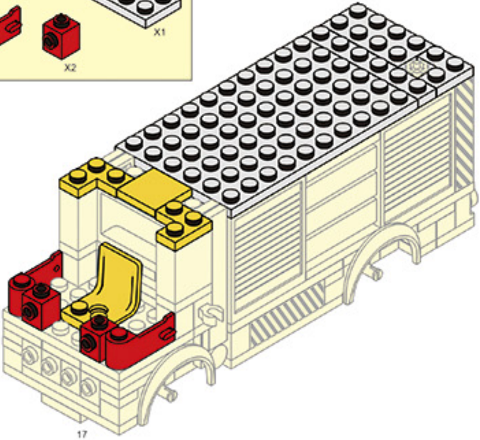

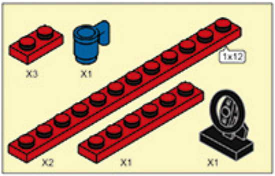
X3
X1
1x12
X2
X1
X1

10

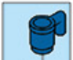

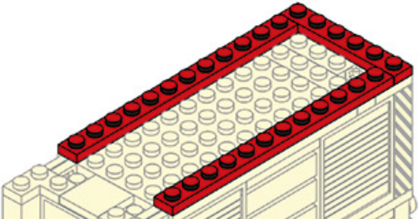

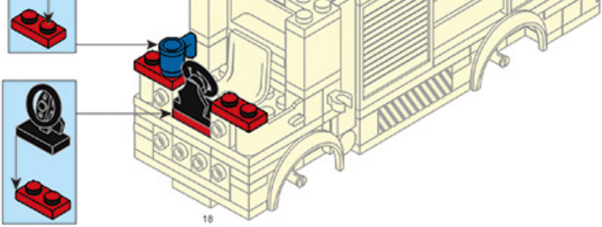

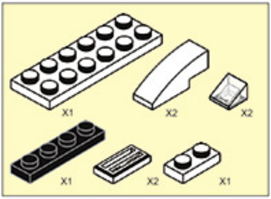
X1
X2
X2
X1
X2
X1

11

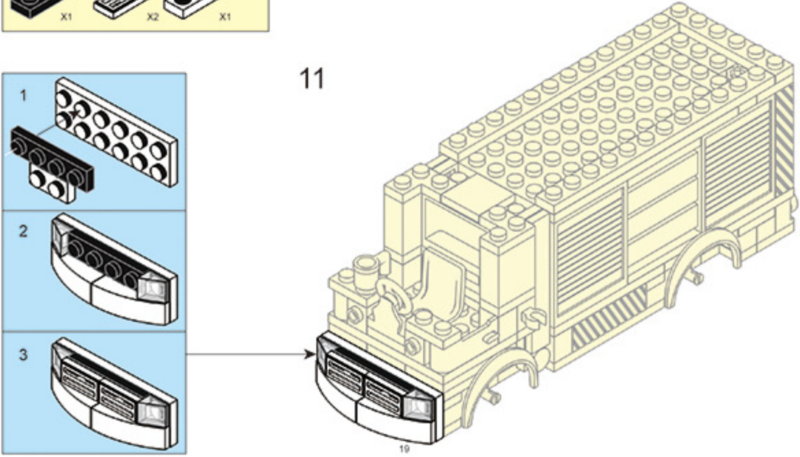

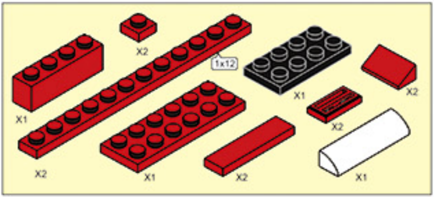
X2
1x12
X1
X1
X2
X2
X2
X1
X2
X1

12

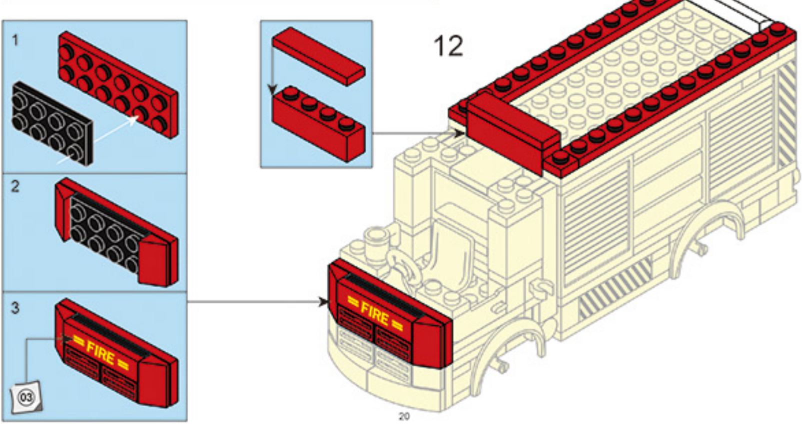
1
2
3
FIRE
03
FIRE

13

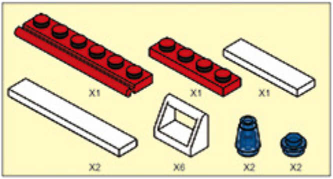
X1
X1
X1
X2
X6
X2
X2

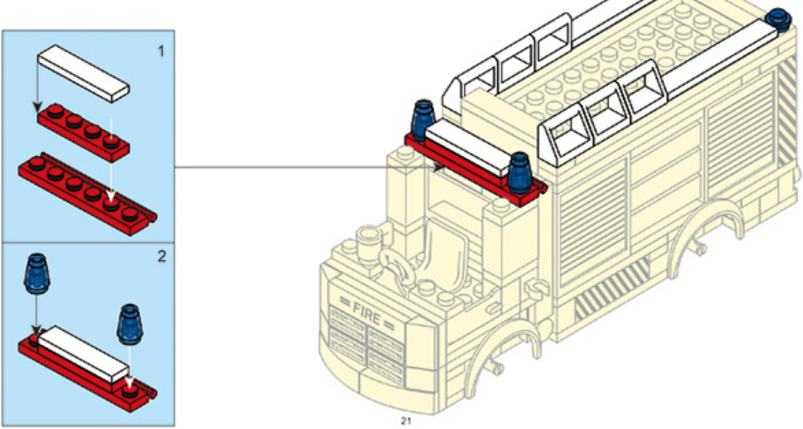

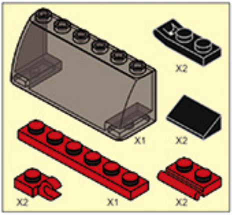
X2
X1
X2
X2
X1
X2

14

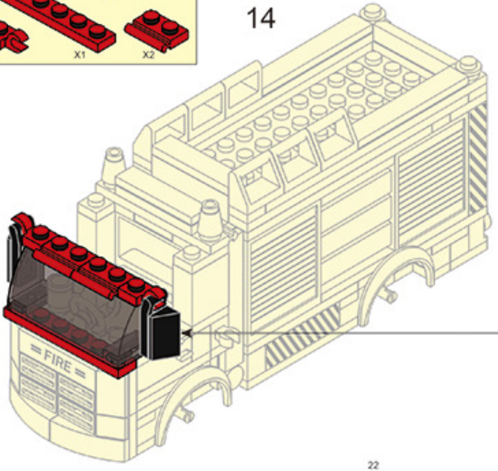

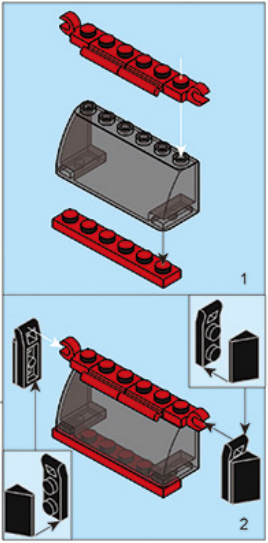

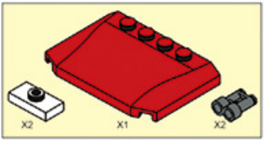

15

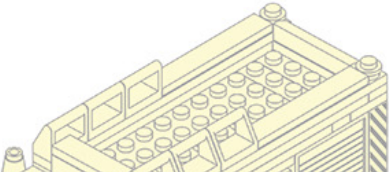

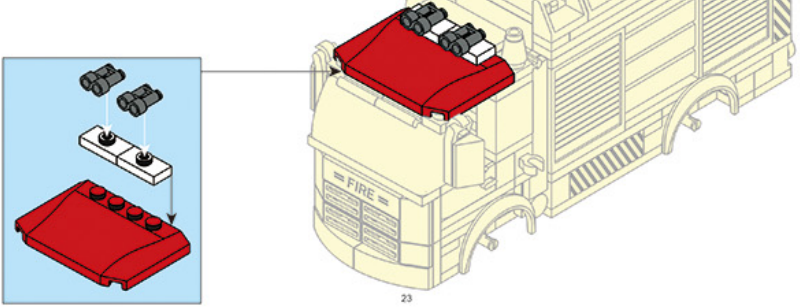

16

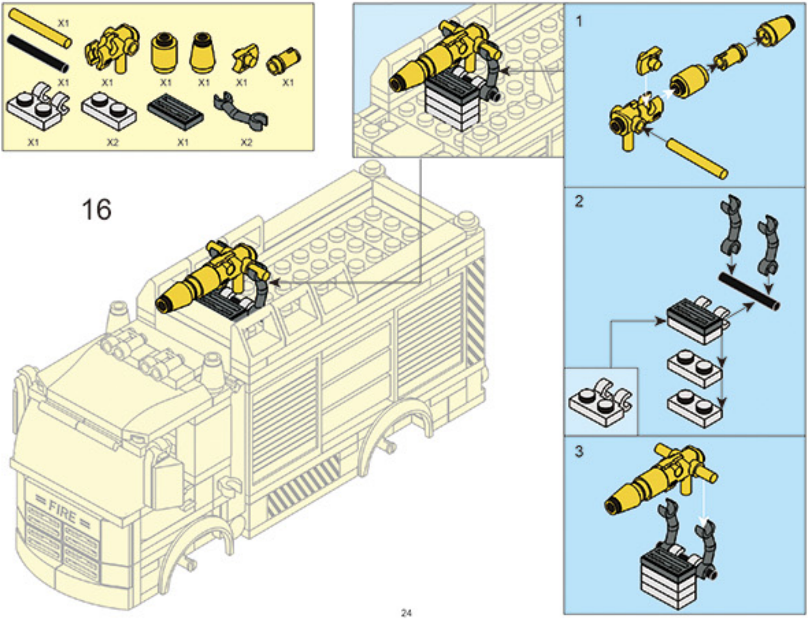
X1
X1
X1
X1
X1
X1
X1
X1
X2
X1
X2
1
2
3
FIRE

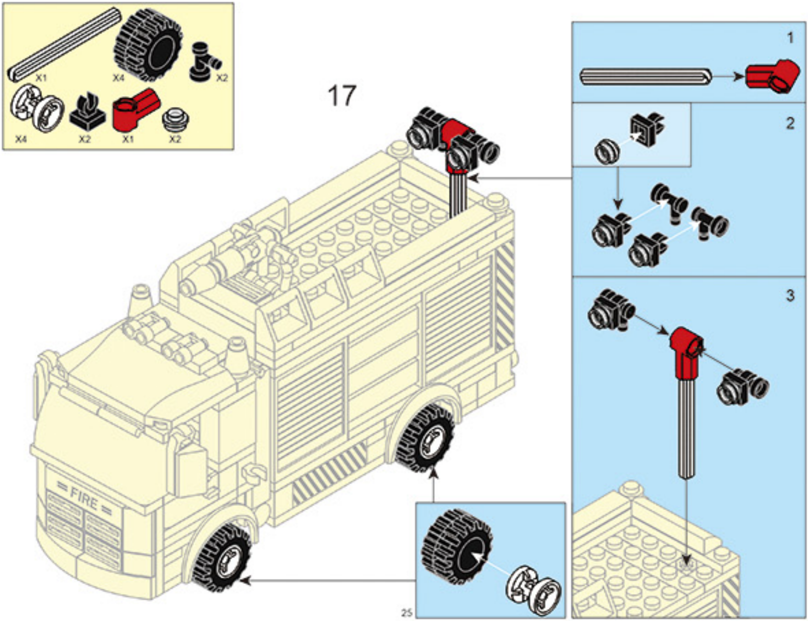
X1
X4
X2
X4
X2
X1
X2
17
1
2
3
FIRE
25

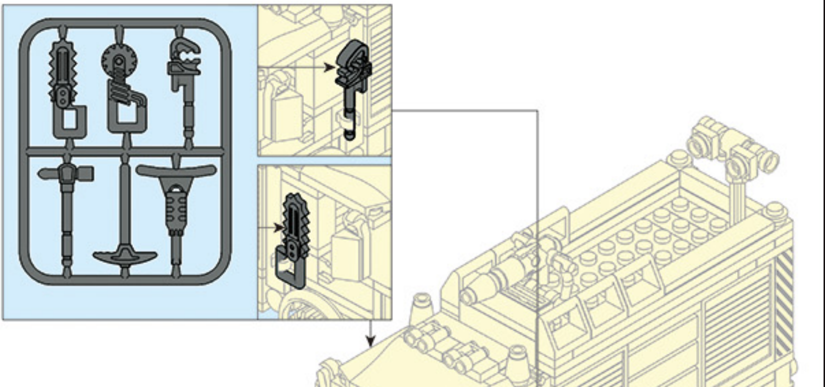

18

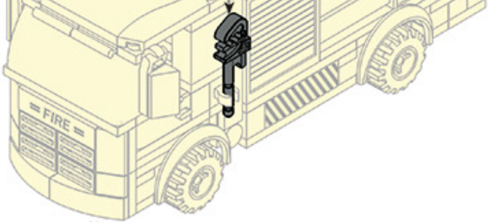

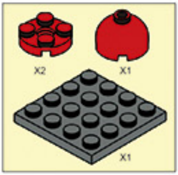

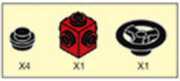

1

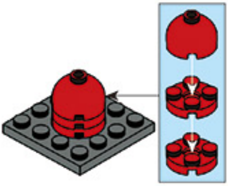

2

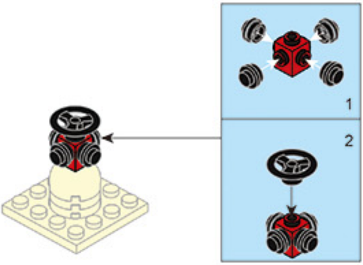

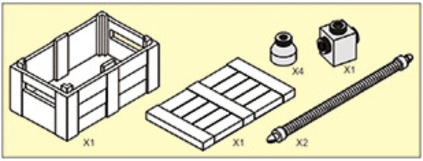
X4
X1
X1
X1
X2

3

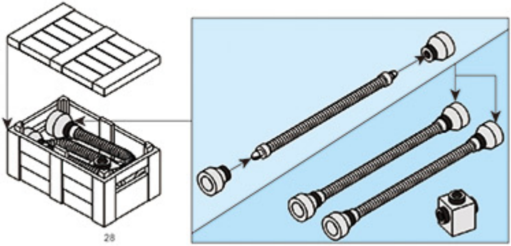

4

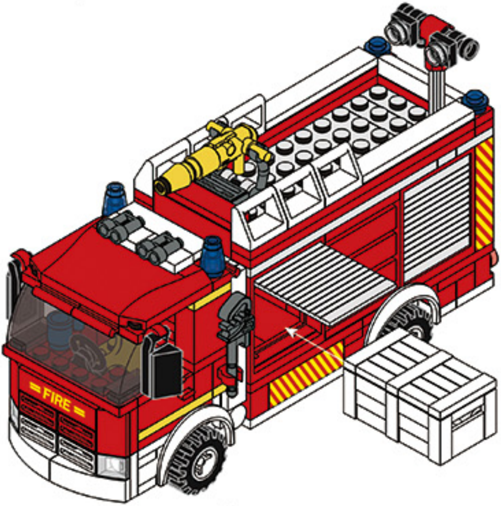

5

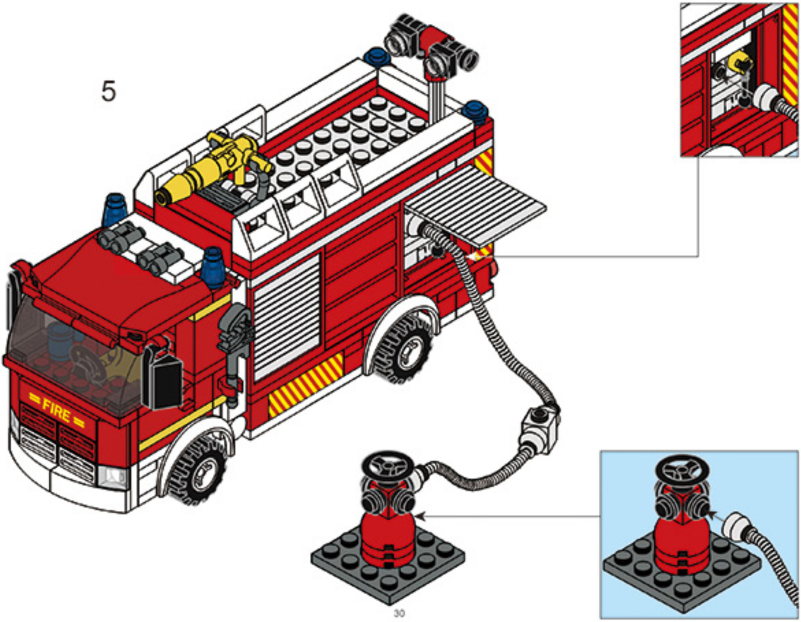

⚠ WARNING:
CHOKING HAZARD - Small parts.
Not for children under 3 years.